Refineries

Bo Jansson Swedish EPA

bo.jansson@naturvardsverket.se

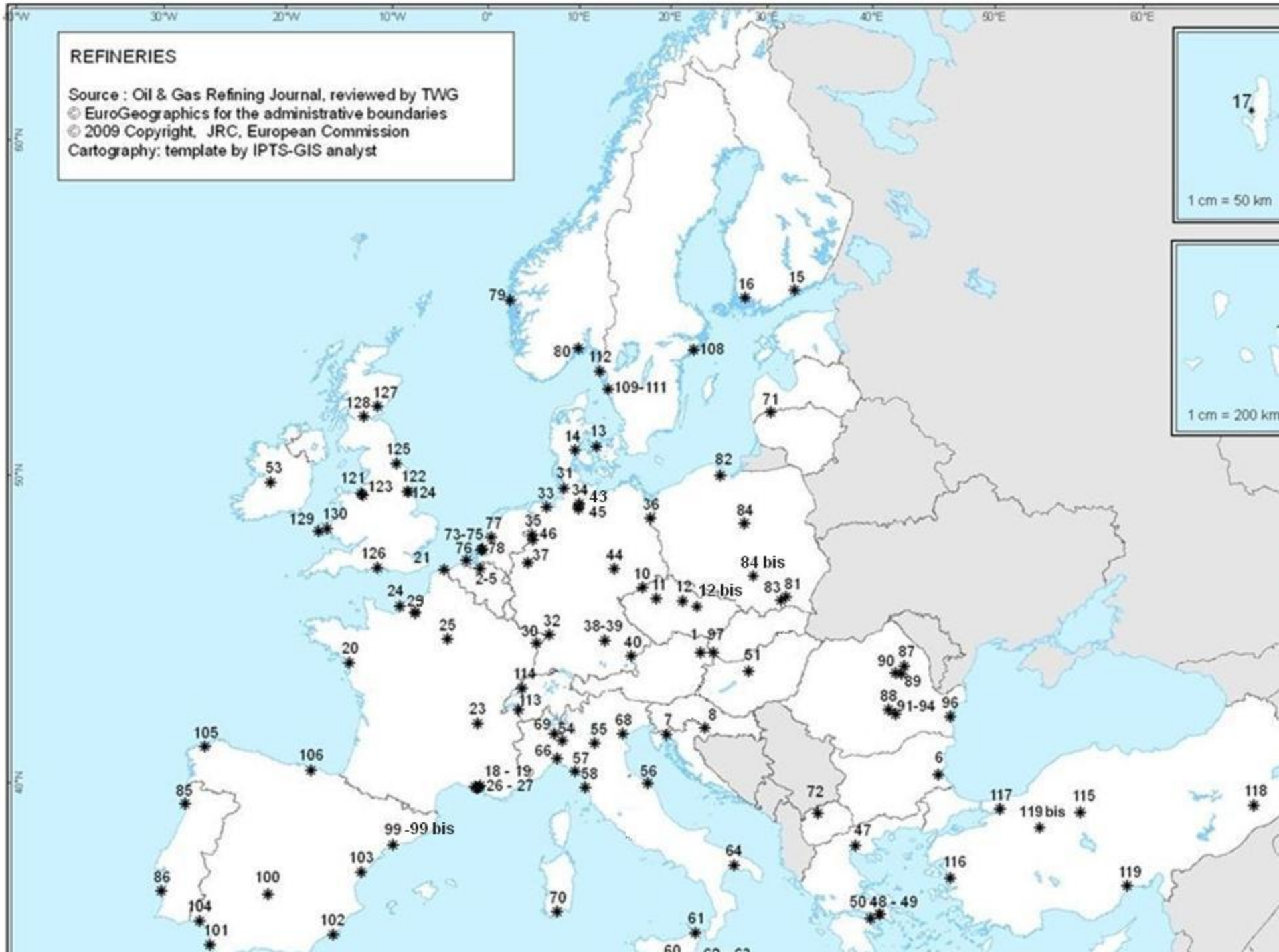
REFINERIES
Source : Oil & Gas Refining Journal, reviewed by TWG
© EuroGeographics for the administrative boundaries
© 2009 Copyright, JRC, European Commission
Cartography: template by IPTS-GIS analyst
1 cm = 50 km
1 cm = 200 km

Delivered oil products to Swedish market

Petrol and diesel fuel with bio fuel content

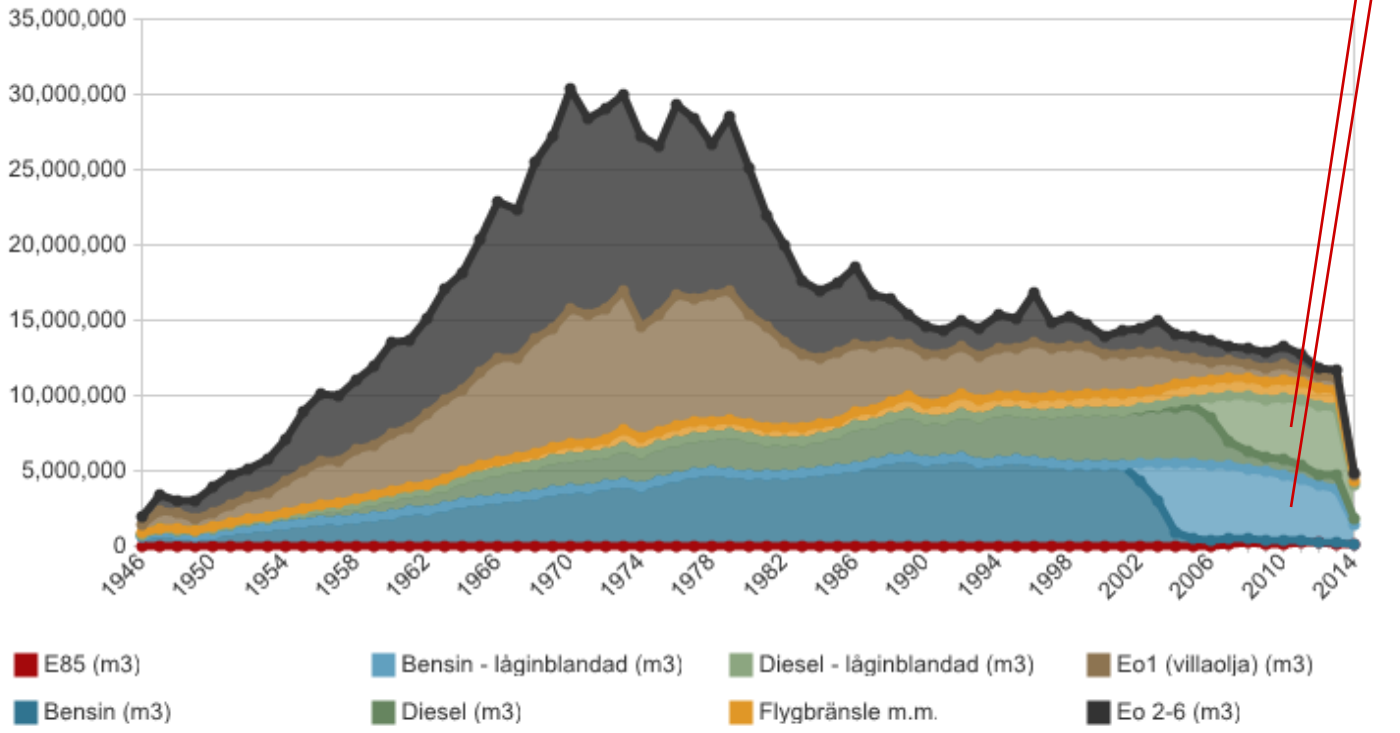

5 Swedish refineries

- Preem Lysekil (11,5 Mton)
- Preem Gothenburg (6 Mton)
- St 1 (former Shell) Gothenburg (5 Mton)
- Nynas, Nynäshamn (1,5 Mton)
- Nynäs , Gothenburg (0,7 Mton)

- Refineries have had individual, integrated permits with individual conditions since 1969

Typical refinery operations

- Coking
- Vacuum Distillation
- Catalytic Cracking
- Atmospheric distillation
- Catalytic Reforming
- Catalytic Hydrocracking
- Catalytic Hydrotreatment
- Alkylation
- Isomerisation
- Hydrogen Production
- Sulphur recovery

How to compare Refineries
Large and small Refineries
Simple and complex Refineries

- Through put
- Crude Distillation capacity
- 0,5-23 Mtonnes/year, (Europe)
- Average 8 Mtonnes/year (Europe)

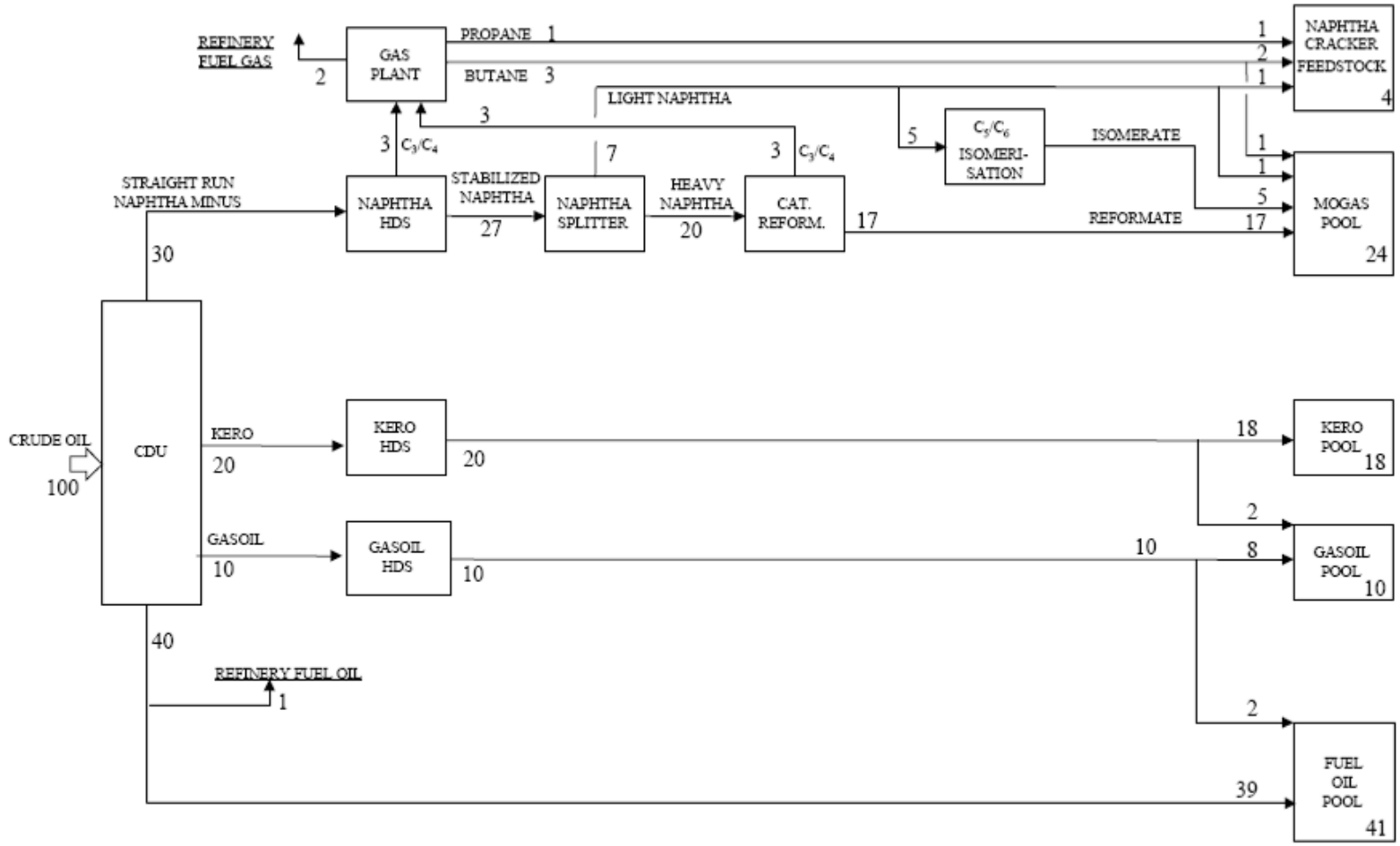

24

28

41

ure 10.1: Scheme 1: Hydroskimming + isomerisation unit

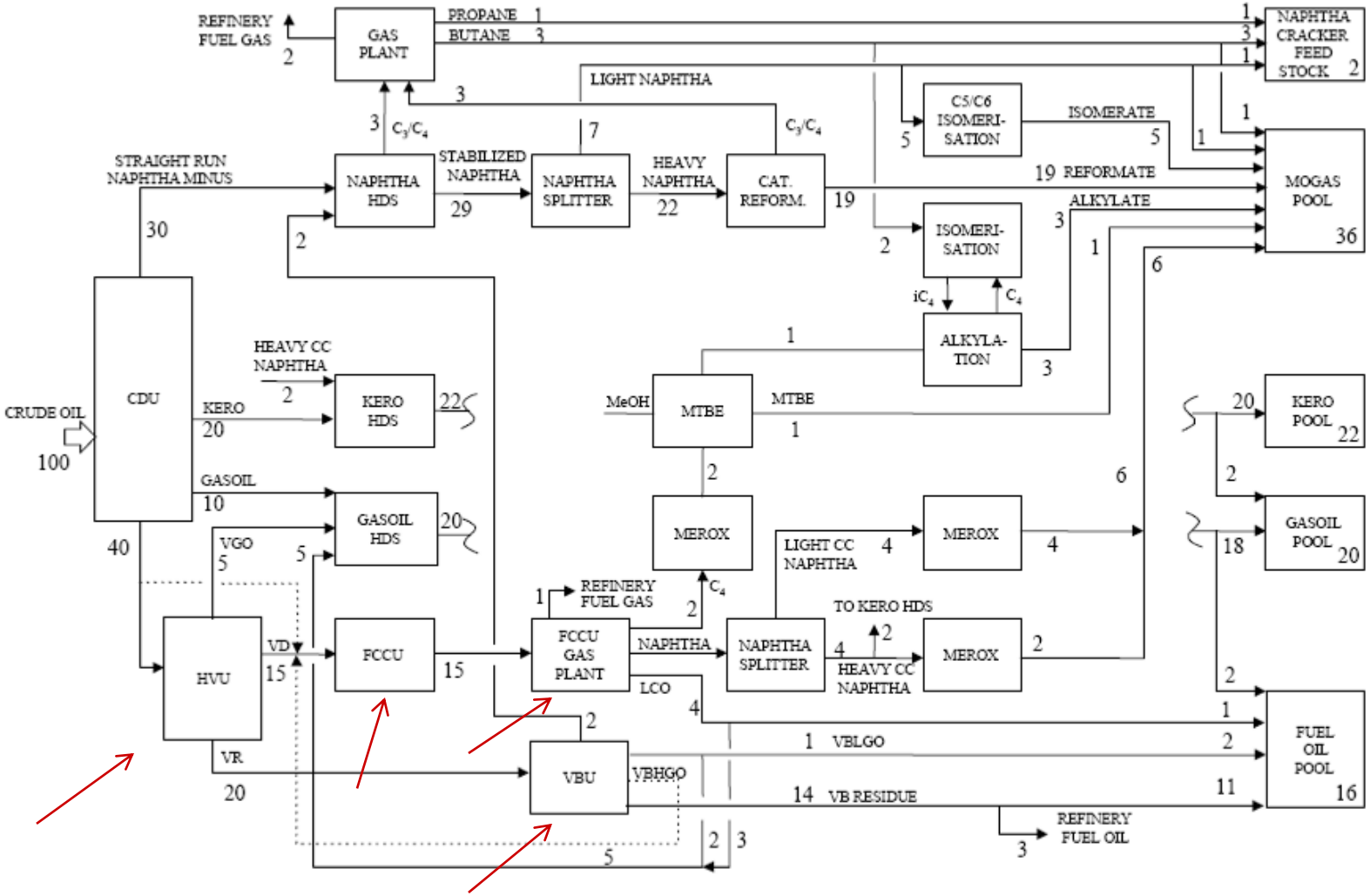

36

42

16

igure 10.2: Scheme 2: Catcracker configuration

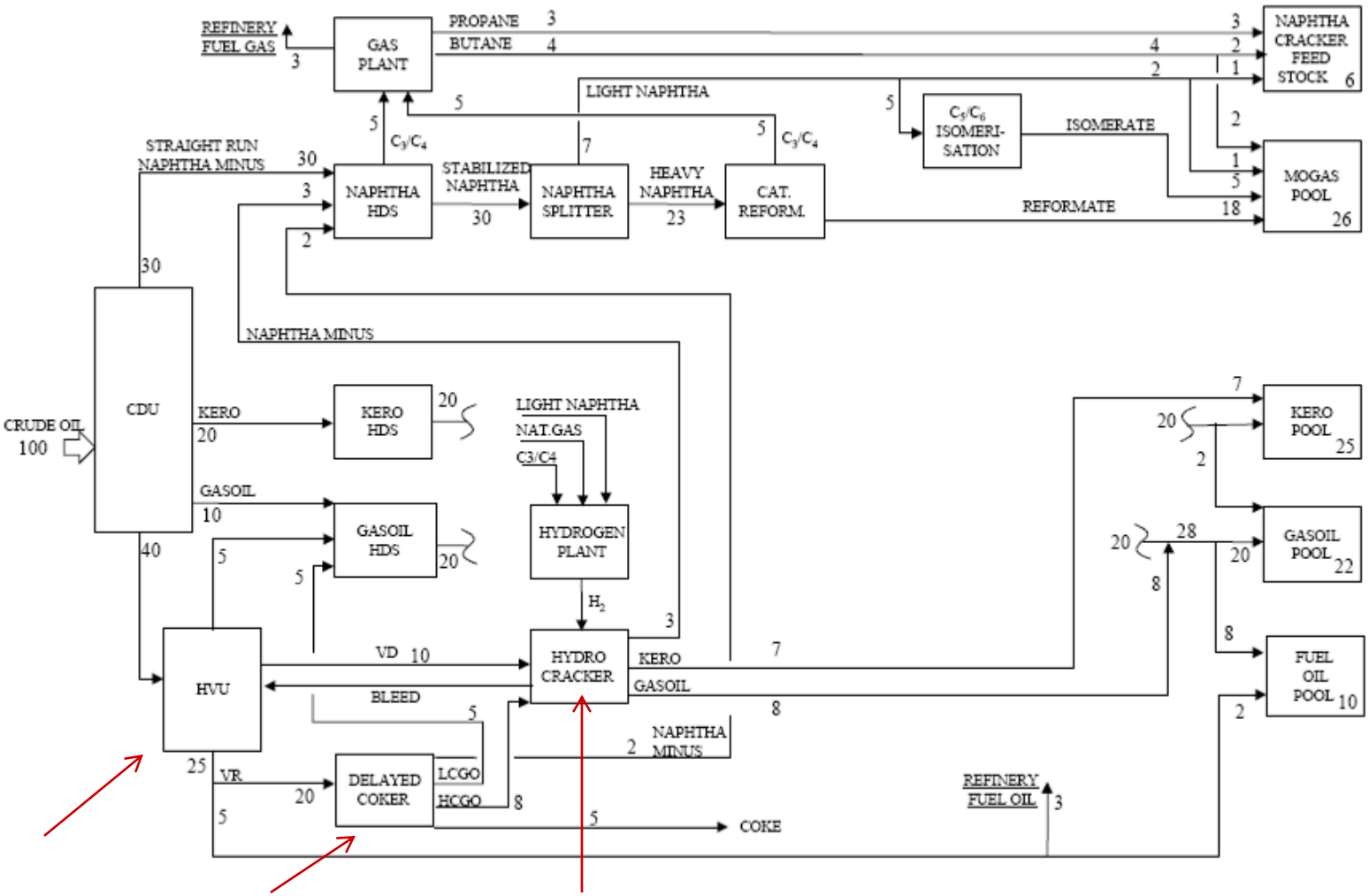

36

47

10

igure 10.3: Scheme 3: Hydrocracker configuration

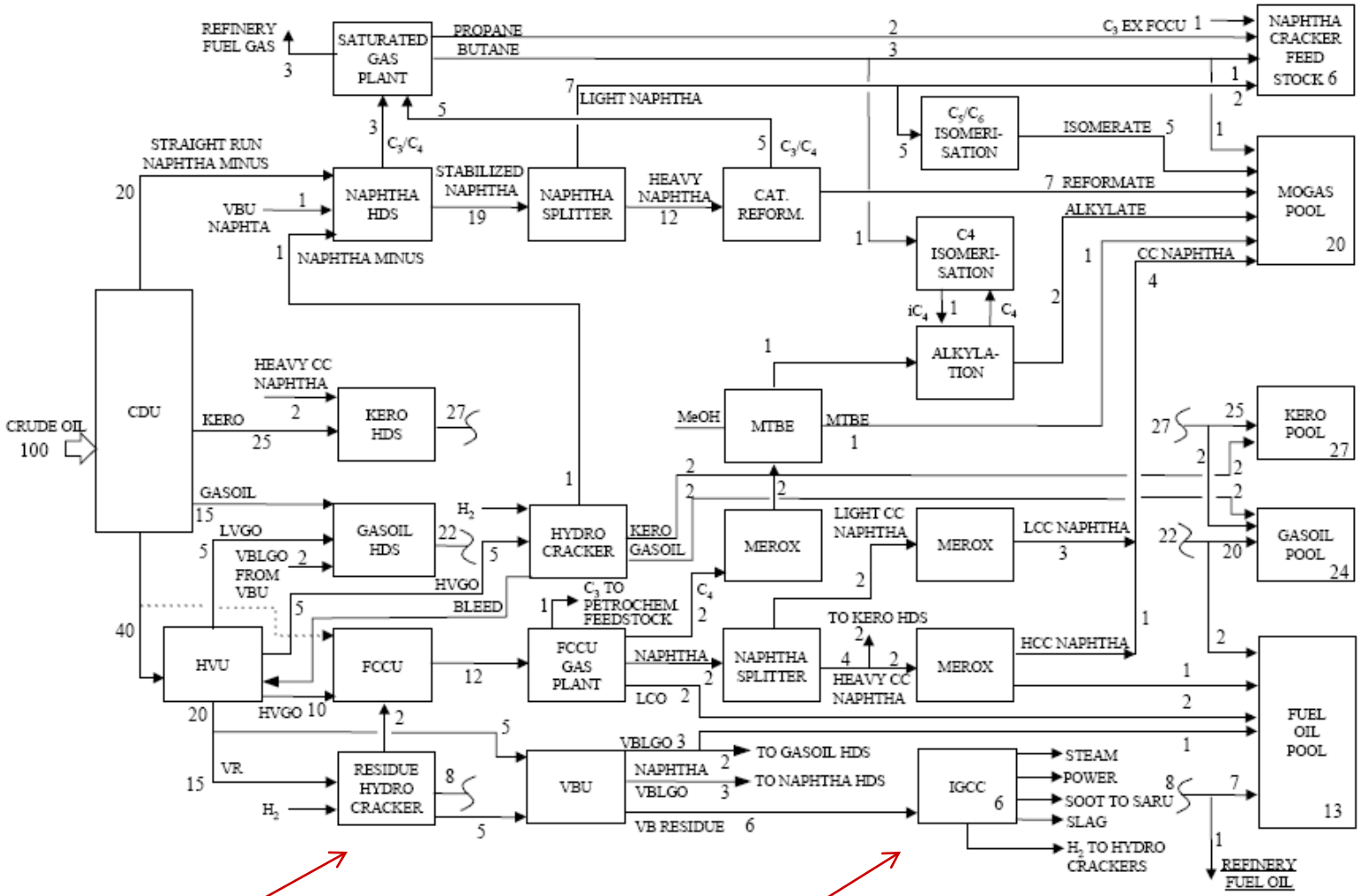

20

51

13

Figure 10.4: Scheme 4: Complex refinery with hydroconversion and IGCC

Preem Lysekil - 11,4 Mton Crude /year

- Crude Destillation
- Vacuum Destillation
- Desulphurisation (SynSat, MHC, Iso Cracking reactor)
- Catalytic Reformer
- Thermal and Catalytic Cracker
- Sulphur recovery (3 Claus + TGTU)
- Isomerisation
- Polymerisation
- Hydrogen gas production
- Boilers

Nelson complexity index (EU15)

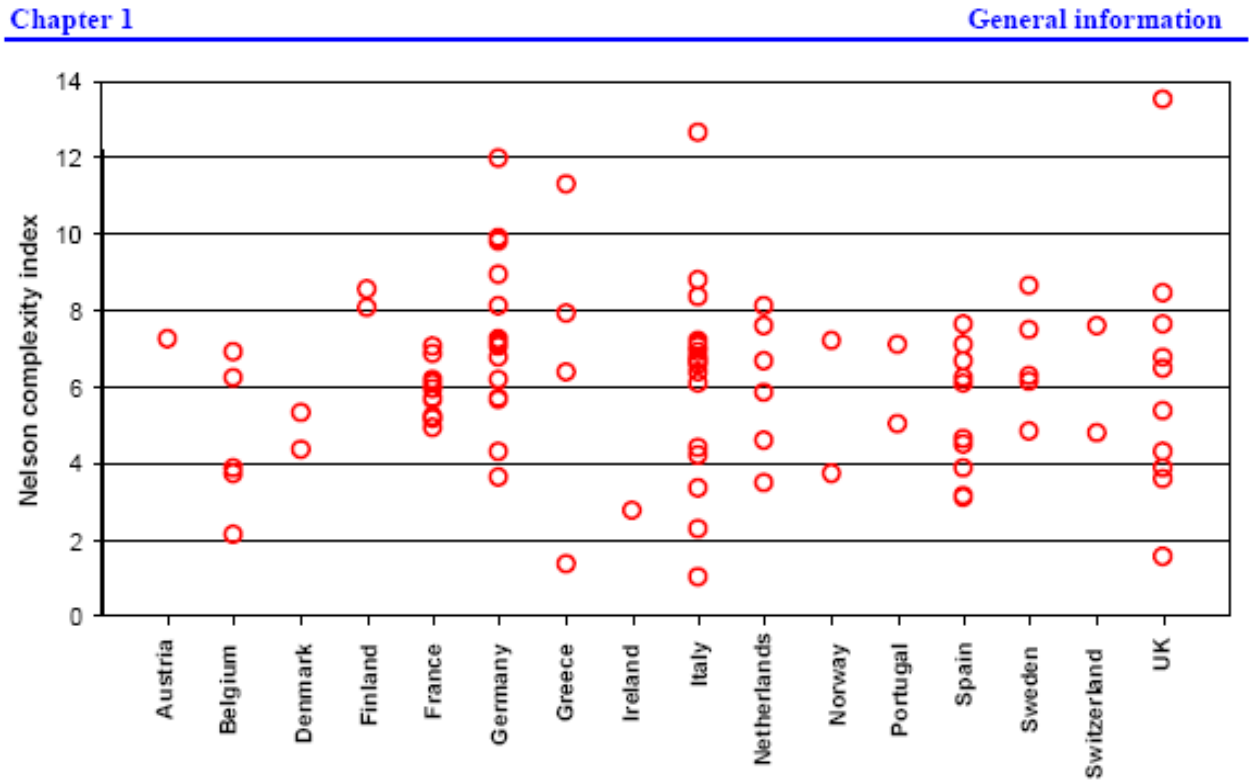

Figure 1.3: Nelson complexity index of European refineries per country (average 6.1)

Emissions to air

- Air emissions- related to energy
- How to be energy efficient
- How to measure energy efficiency

Action in order to improve energy efficiency - examples

- Installation of waste heat boilers in furnaces
- Expanded heat exchanger area in heat exchangers where cold streams are preheated by warm product streams from process

Action in order to improve energy efficiency - Examples

- Direct feed of “semi products” to processes without cooling/storage
- Balancing of vapour and fuel gas systems
- Effective combustion processes
- High efficiency on pumps and compressors
- Make use of waste heat

How to measure energy efficiency

- MJ/tonnes of crude
- Tonnes CO2/tonnes of crude (related to complexity)
- Energy Efficiency Index

EU 15 Refineries CO_2/tonne

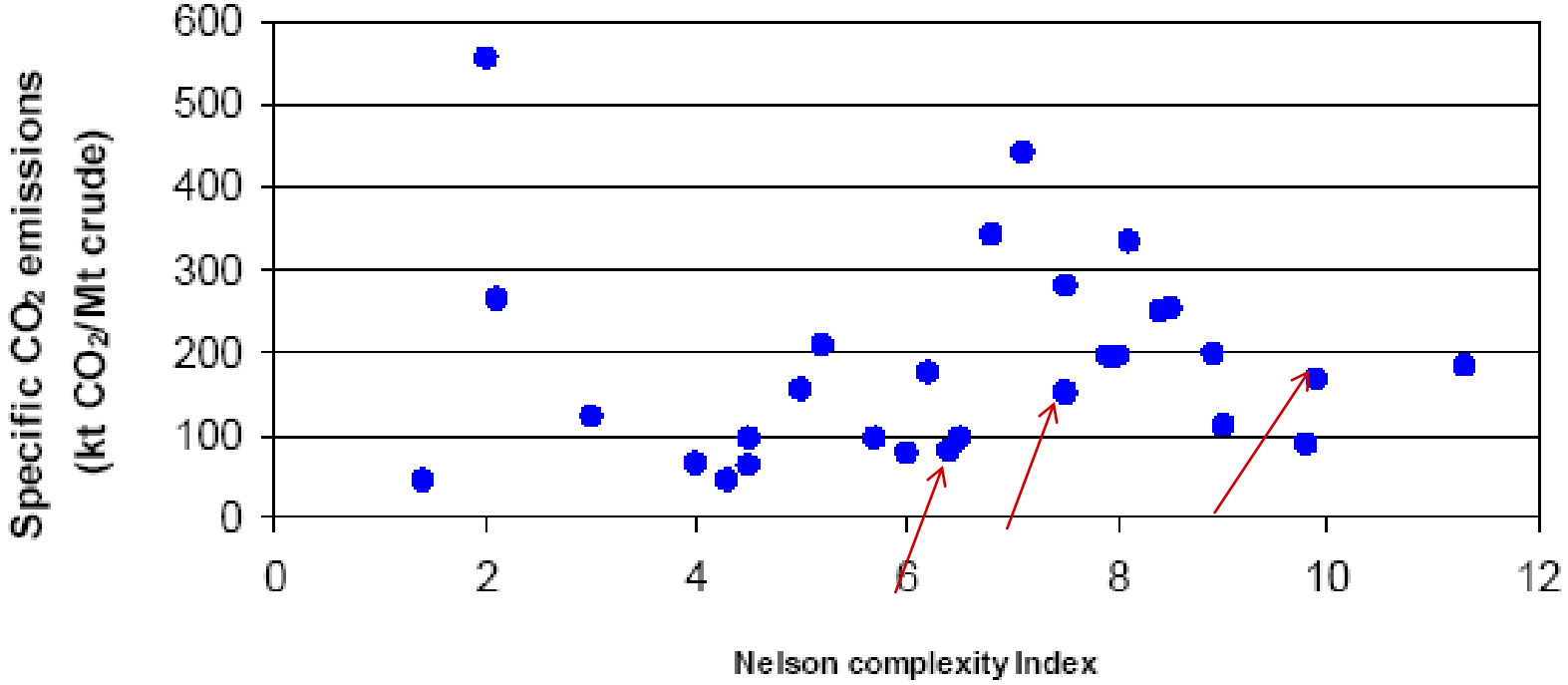

26 of 100

EII- Energy Intensity Index
A energy efficiency benchmark

EII = “real energy use” /”theoretical energy use”

	1994	1998	2000	2002
Nr. of refineries	84	75	68	72
EII Preem (L)	70	59	59	65
Ranking Preem (L)	7	2	2	4
EII Average WE	87	83	81	81
Interval WE	58-124	55-106	58-105	54-101

2008: interval 65-120 in IED BREF World average 92

2015 Preem (L) EII 78

Air Emissions

- SO_2
- NOx
- Particles
- VOC
- Smell

Sulphur emissions

- Furnaces and boilers
- Catalytic cracker
- Sulphur Recovery
- Flaring

Fuel for furnaces and boilers

- Energy efficient plants- need less fuel- can use refinery gas (low sulphur content <50 ppm (vol))
- Minimize the use of oil as fuel and limit the S content in the oil
- If not use end of pipe (cleaning)

Sulphur recovery plants

- Claus unit – (95%)
- Claus + Tail Gas Treatment Unit (99,9 %)
- Flaring from SRU included

- Avoid unnecessary flaring

SO_2 emissions – Swedish Refineries 2004

(red figures 2008)(green figures 2014)

	Preem (L)	Preem (G)	ST 1
Crude, Mtonnes	10 (10) (11)	6 (5,4) 4,6)	4 (4) (3,5)
SO_2 (fuel), tonnes	210 (106)	260 (178)	286 (28)
Share of refinery gas and other gas %	84 (89) No oil used	91 (94) (99)	91 (99,8) (99,5)
SO_2 (SRU), tonnes	490 (238)	60 (4)	140 (72)
SRU, Efficiency, %	99,7 (99,9) (99,9)	99,0 (99,9) (98,8)	99,6 (99,8) (99,6)
SO_2 , TOTAL	**700 (344) (411)**	**320 (162) (120)**	**426 (100) (62)**

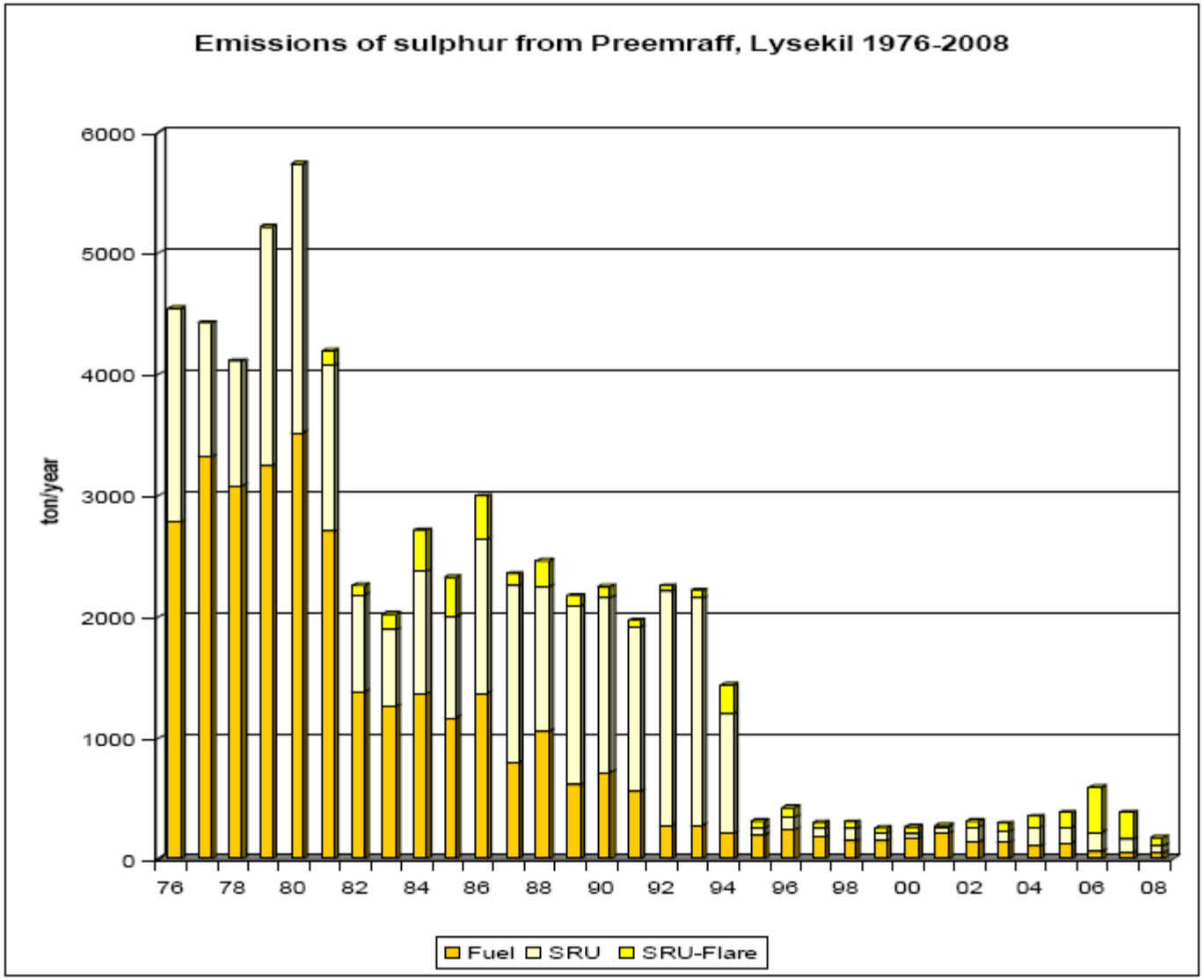
Emissions of sulphur from Preemraff, Lysekil 1976-2008
ton/year
6000
5000
4000
3000
2000
1000
0
76
78
80
82
84
86
88
90
92
94
96
98
00
02
04
06
08
Fuel
SRU
SRU-Flare

Figure 18 European Refinery SO_2 Emissions, 2003

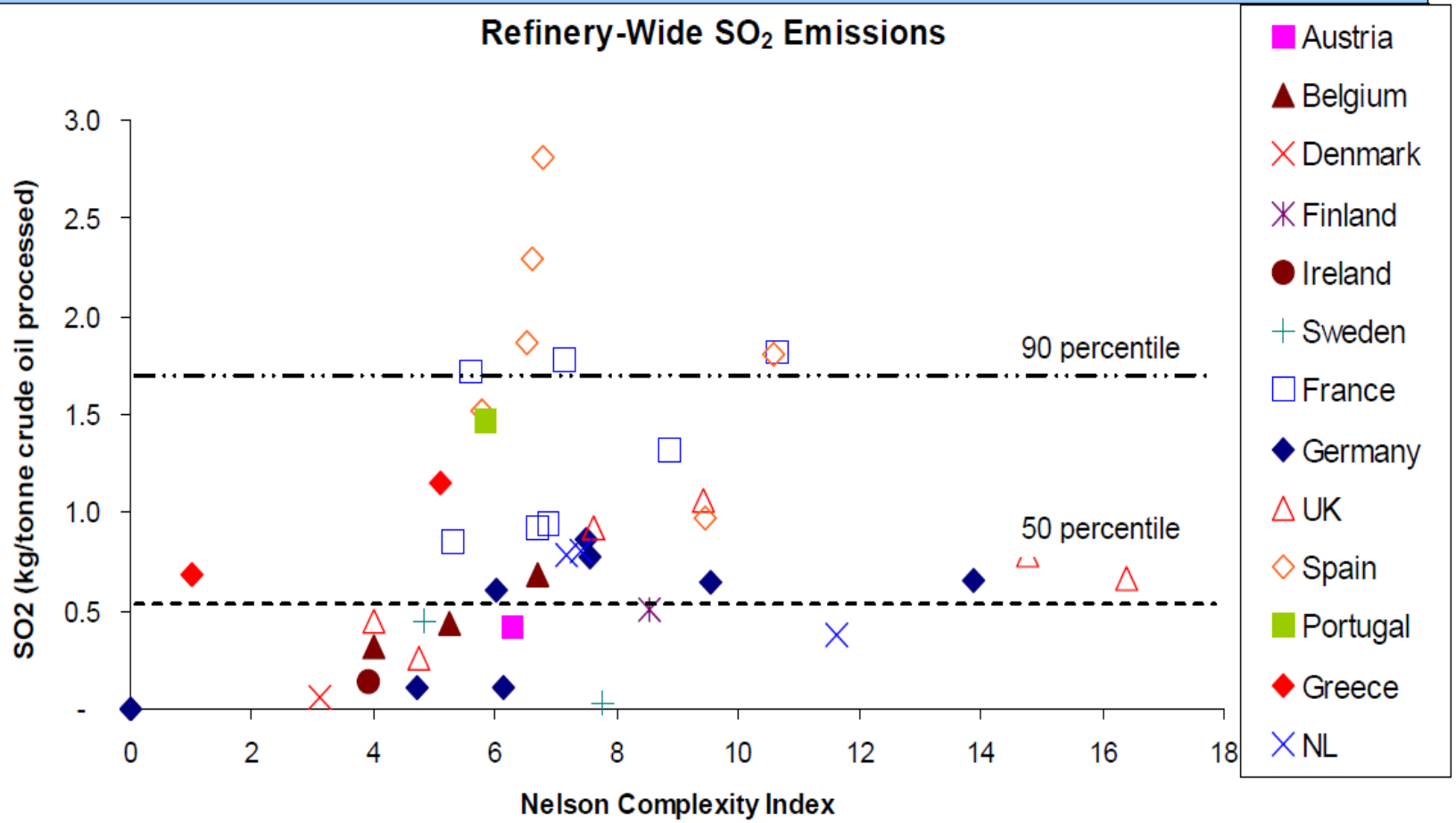

(1) 2003, or the most recent year for which a refinery's data was available.

Nitrogen oxides

- Furnaces and boilers
- Fluid catalytic cracker

Reduction of NOx from furnaces and boilers

- Choice of fuel (typically 60-70 % lower emissions from gas than oil)
- Low NOx burners, gas fuel 15-35 mg/MJ, 50-130 mg/m3), oil fuel 100 mg/MJ, 300 g/m3
- SNCR (50 % reduction)
- SCR (appr. 90 % reduction)

NOx emissions - Swedish Refineries 2004 (2011)(2014)

	Preem (L)	Preem (G)	St 1
Crude, Mtonnes	10 (10) (11)	6 (5) (4,6)	4 (4) (3,5)
NOx (total), tonnes	690 (550) (614)	340 (382) (196)	413 (315) (270)
NOx mg/m ^{3}	150 (120)	150	150-200
NOx tonnes/Mtonnes of crude	69 (55) (56)	63 (76) (43)	103 (90) (77)

Measures – refinery gas, natural gas, minimize oil, low-nox-burners, SCR

Figure 29 European Refinery NO_x Emissions, 2003

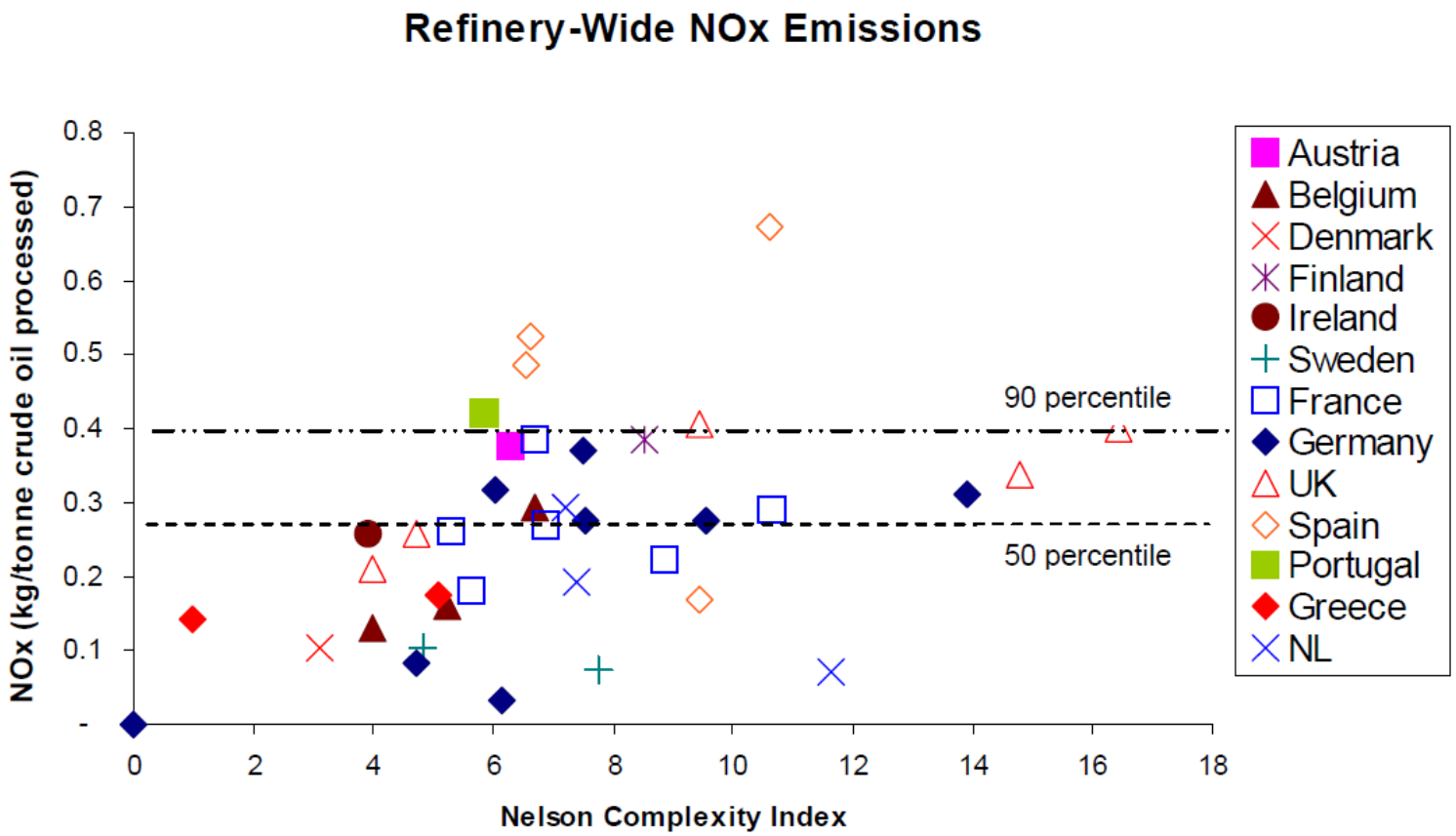

(1) 2003, or the most recent year for which a refinery's data was available.

VOC – emission sources

- Process area
- Storage area for crude and products
- Waste Water Treatment Plant
- Harbours
- Dispatch Stations (truck and rail way)

VOC- Composition

- Alkanes (80-90 %), (C2-C7)
- Alkenes (5-15 %), (C2-C6)
- Aromatics (3-5 %), (C6-C8)

NATUR VÅRDS VERKET

- Thousand of potential leaking sources
- Sources spread over a very large area some of them high above ground
- Some potential leaking points are tight when installed but will leak eventually

Is this a major problem?

-how to find out (calculations or monitoring)

How to keep emissions low?

- choice of eqipment

- leak detection and repair (LDAR)

Are we successful? Asses

- monitoring

Measures to reduce VOC- process area- examples

- Tight equipment (live-loading valves, bellow seal valves, seal less pumps, Pumps with double mechanical seals)
- Minimize flanges
- Compressor vents connected to the flare

Leak detection and repair

- At a Swedish refinery 100.000 potential leaking points are leak tested twice a year. If leaks are found (def) action must be taken in order to stop leak

IR Camera
a complement to sniffer

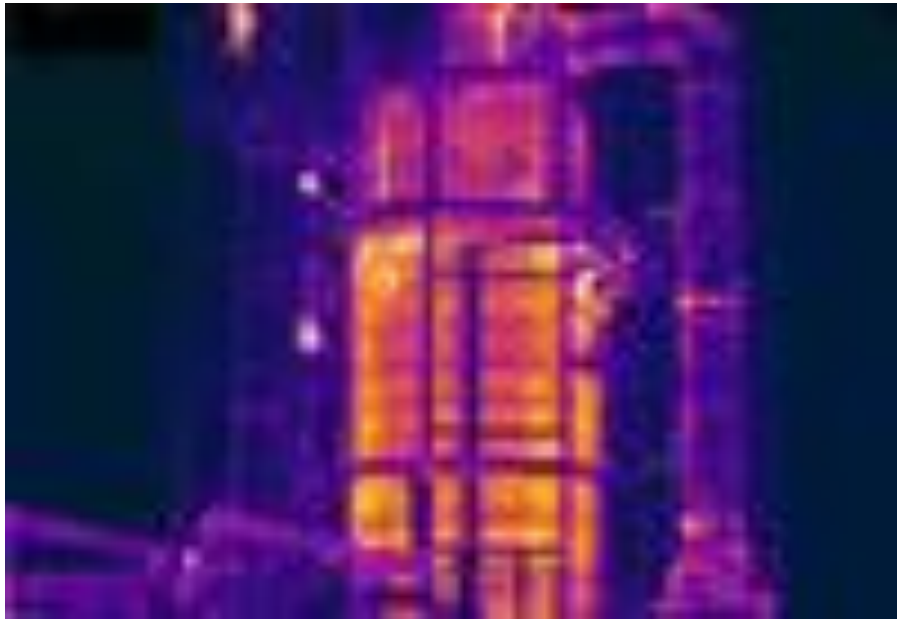

- Possible to search for leaks in difficult positions
- Easy to handle
- Need to define a leak

Measures to reduce VOC-Tanks and WWTU

- Floating roofs (inner and outer floating roofs, primary and secondary seals)
- Floating roofs on equalizing tanks before API separators
- Floating decks on API separators

Are the measures good enough?
How to estimate total VOC emission

- Calculations (API, EPA, Concawe)
- Monitoring (Trace gas, DIAL, SOF)

Programme for VOC mitigation

- Monitoring

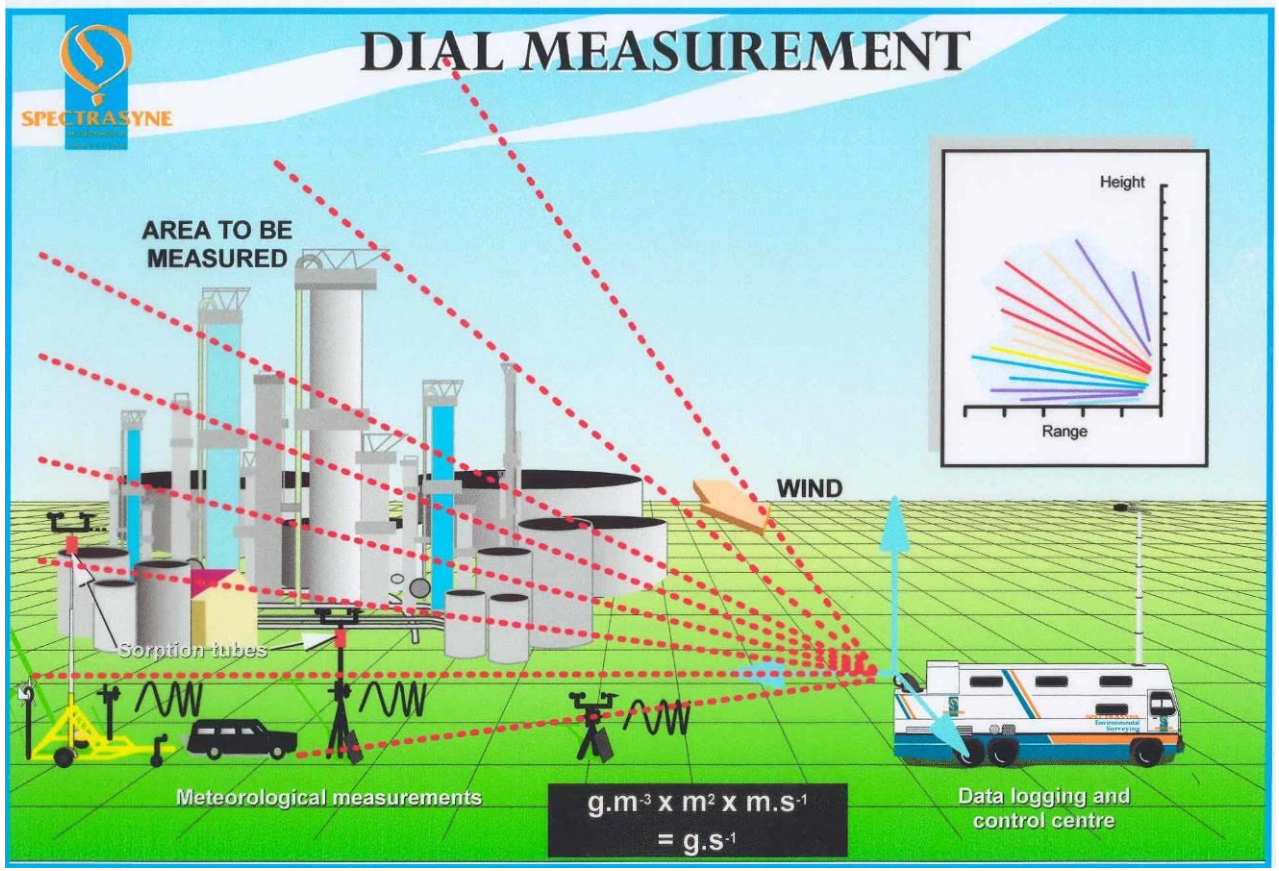

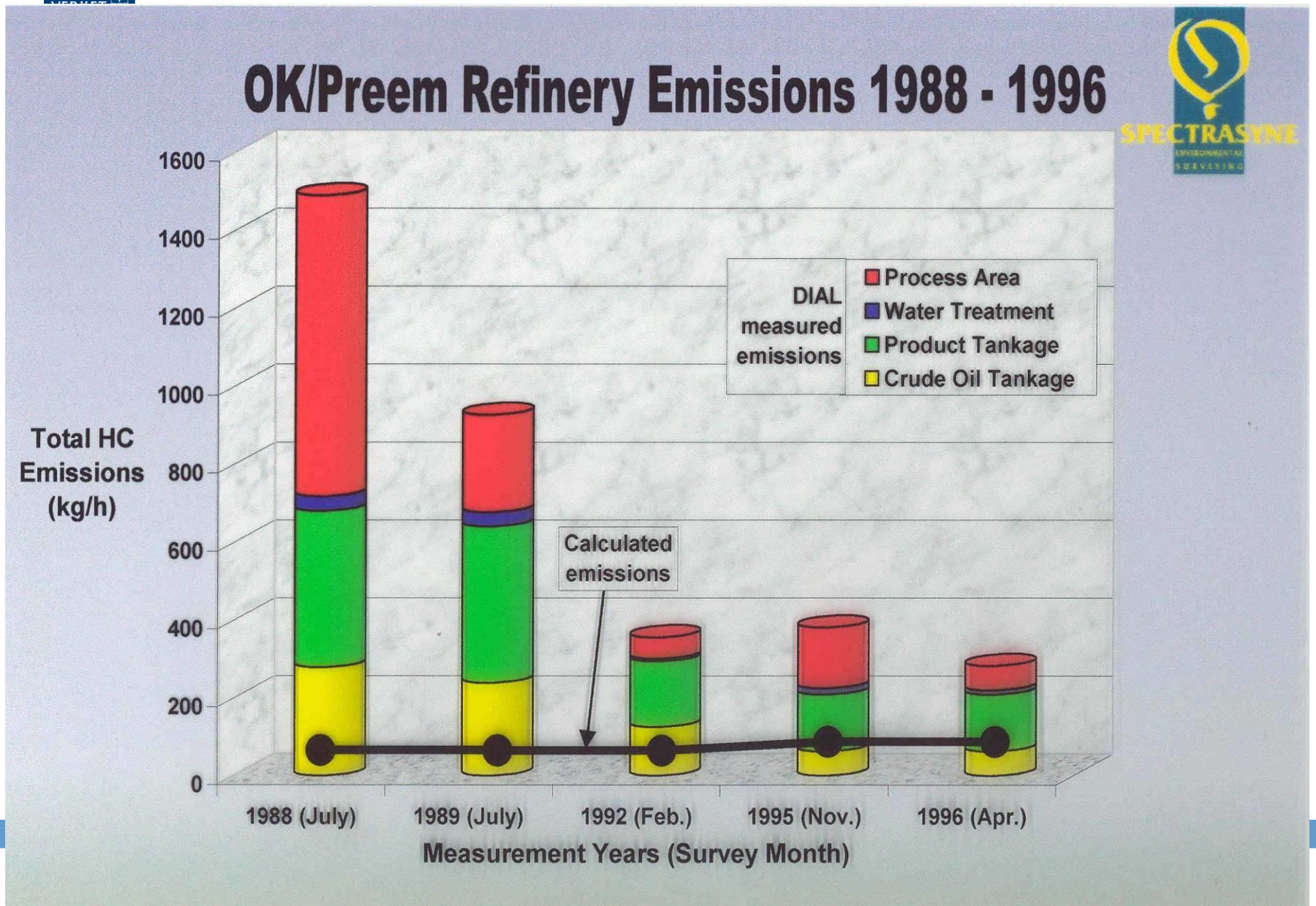
OK/Preem Refinery Emissions 1988 - 1996
SPECTRASYNE
Total HC Emissions (kg/h)
1600
1400
1200
1000
800
600
400
200
0
DIAL measured emissions
Process Area
Water Treatment
Product Tankage
Crude Oil Tankage
Calculated emissions
1988 (July)
1989 (July)
1992 (Feb.)
1995 (Nov.)
1996 (Apr.)
Measurement Years (Survey Month)

The Solar Occultation Flux method (SOF)

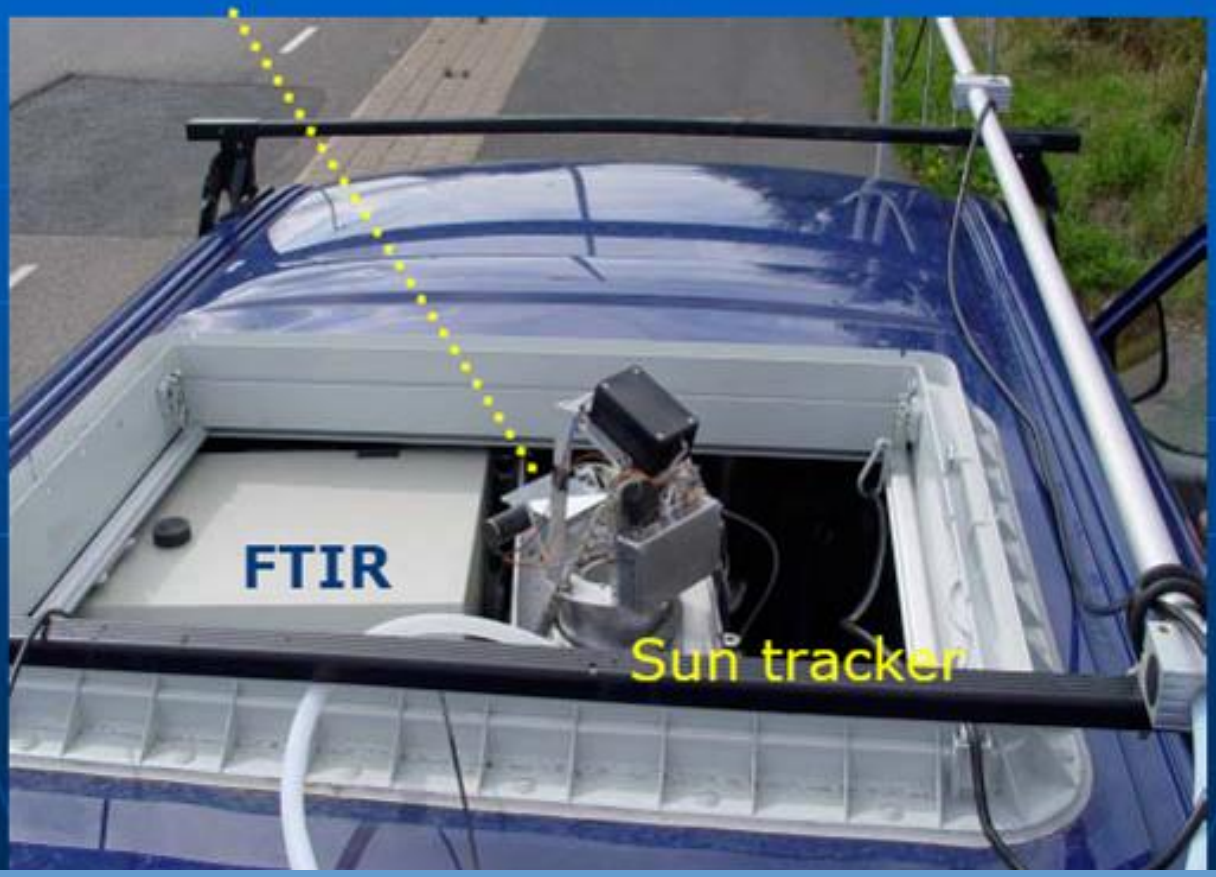

SOF (Solar Occultation Flux) method

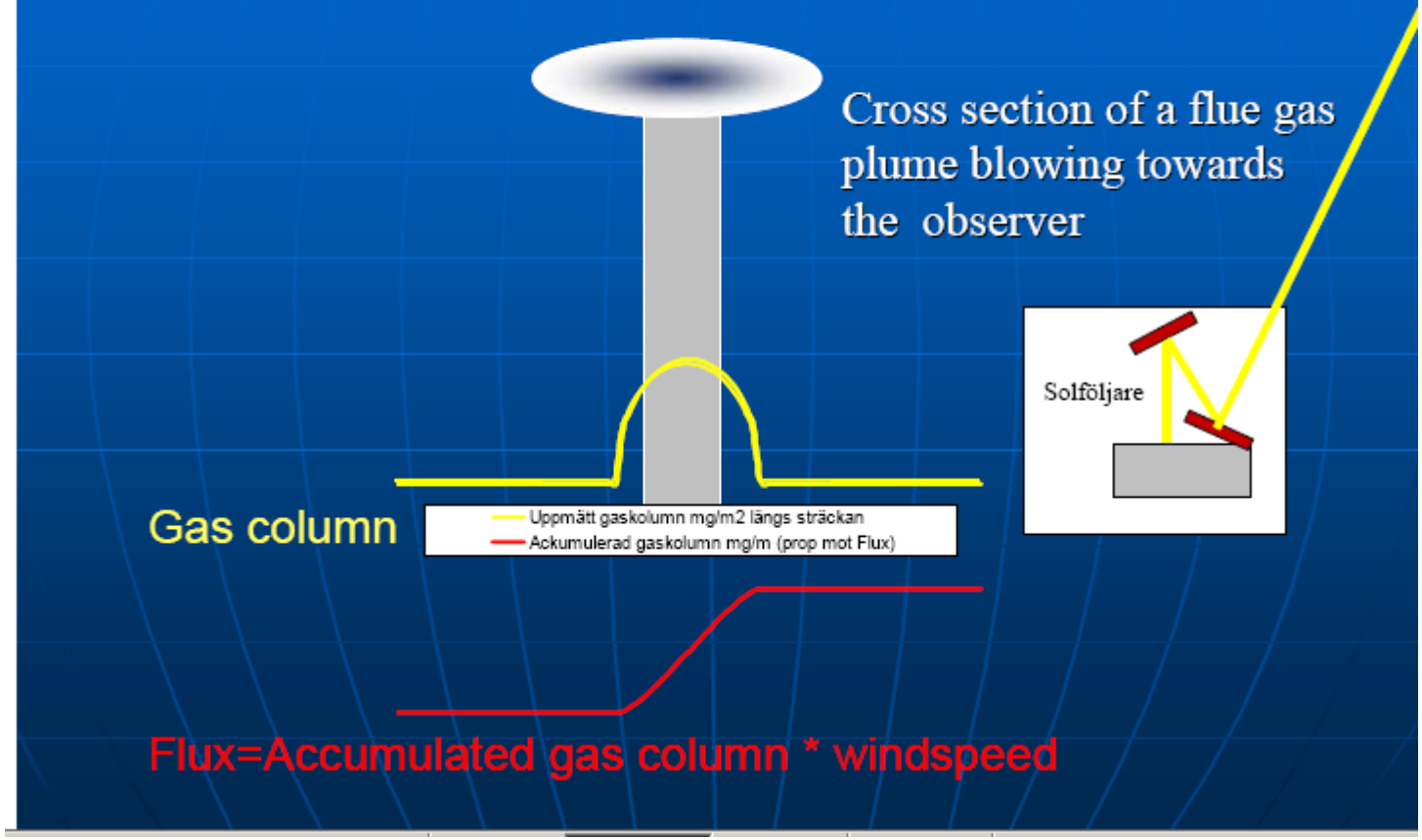

SOF method – Gothenburg harbour

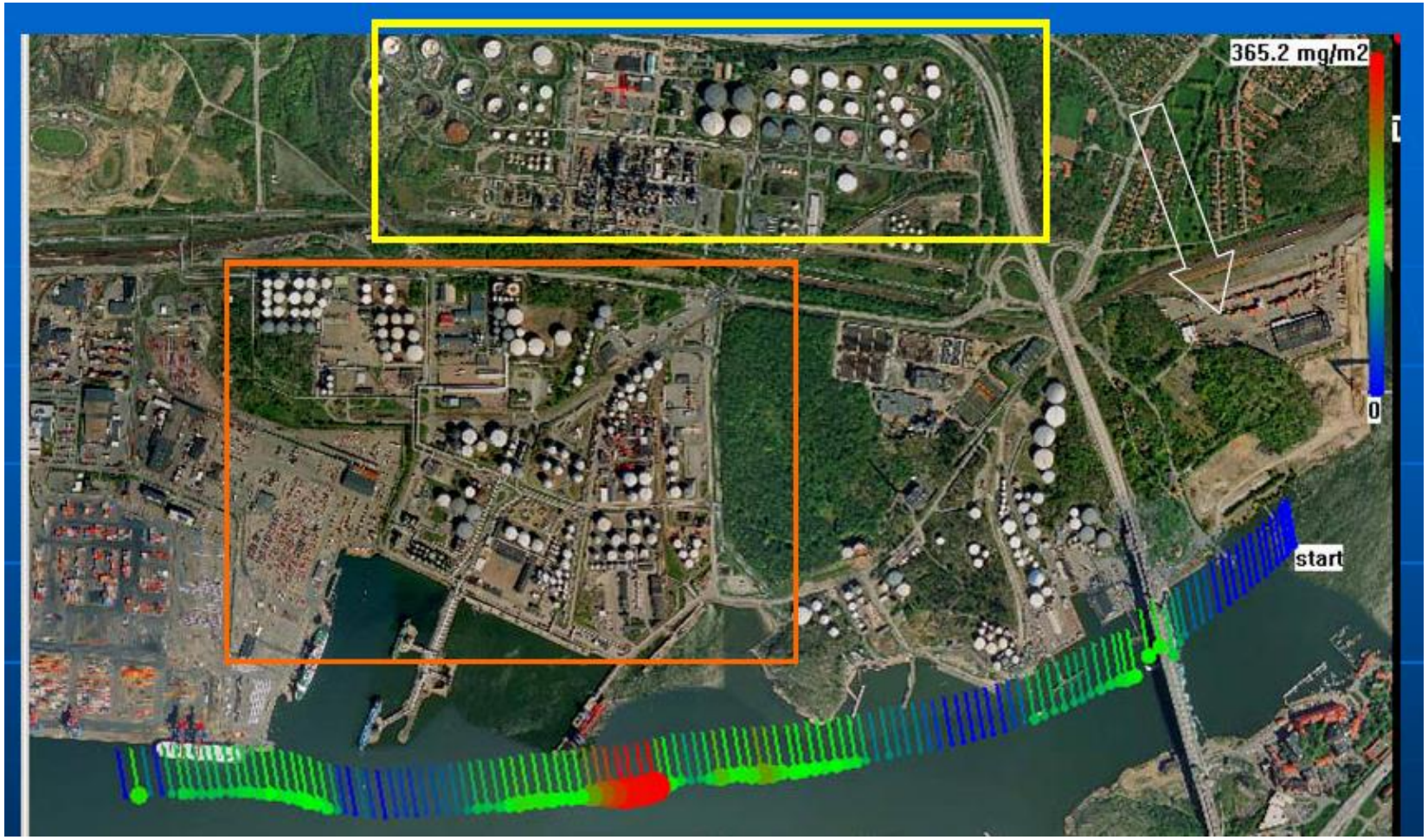

Leakage search /screening

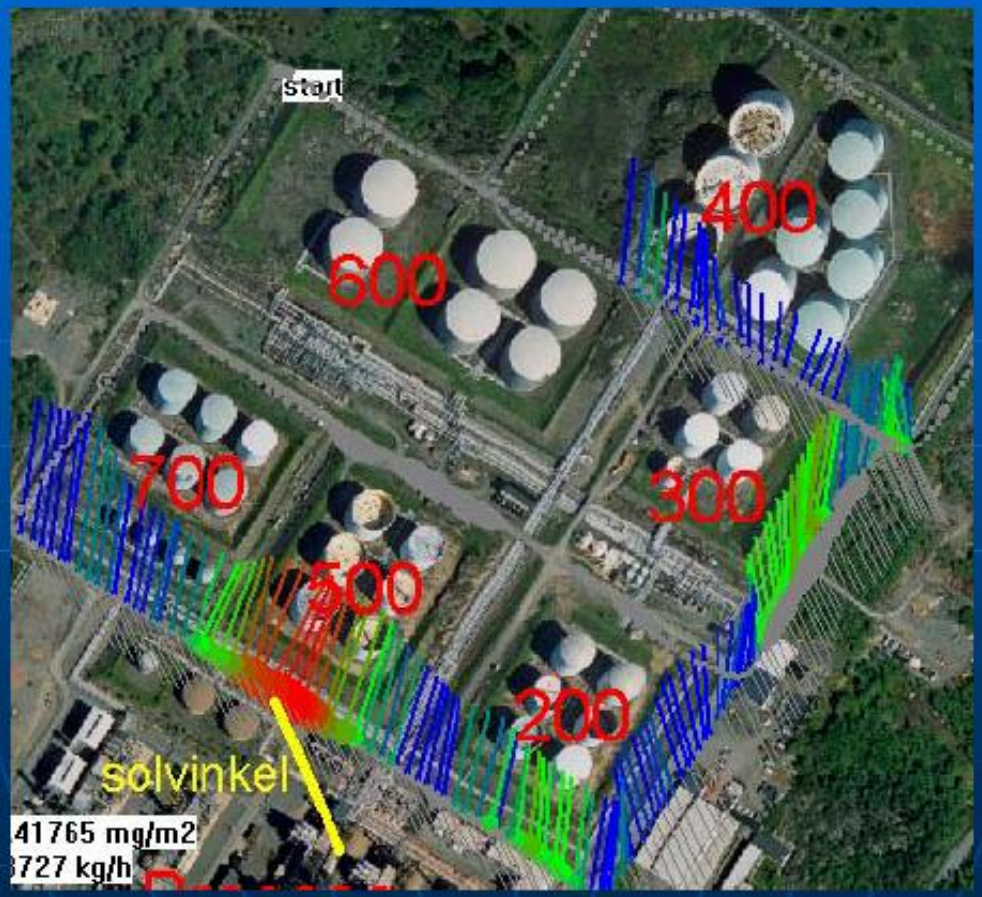

Total emission – 3910 tonnes /year

Conditions in a permit

- The operator shall with a suitable detection equipment recurrently (regularly) trace leaks from valves, flanges, pumps and other process equipment within process area and tank area. The leak detection shall also be carried out on floating roofs, storage caverns, waste water treatment plant and areas for loading of products.
- The operator shall, in consultation with the inspection authority, carry out necessary repairs, exchange or improvement of equipment and other that is needed.
- The leak search shall also include smelly substances.

- The operator shall continuously take measures to reduce VOC emissions from the plant. In order to do this the operator shall establish a plan for this work and present it to the inspection authority.
- The plan shall be revised every year. From the plan it shall be clear what measures will be taken the coming year.

Discharge into water
Typical emission parameters

- Oil (total extractable hydrocarbons)
- COD
- BOD
- Particles
- Phenols, metals
- Nutrients (total N and total P)

Discharge into water- measures to reduce impact

- Minimize use of water, reuse water
- Segregate pure surface water from Waste Water
- Effective desalter
- Equalizing Tank before API separator
- Biological treatment with pre-treatment
- Separate cooling water and **keep clean**

Discharge levels –BREF OLD BREF (2001)

	mg/l, (monthly)	g/tonne crude (yearly)
Total hydrocarbon	0,05-1,5	0,01-0,75
BOD	2-20	0,5-11
COD	30-125	3-70
Total N	1,5-25	0,5-15
Susp. solids	2-50	1-25
Total metals	<0,1-4	

Oil Discharges Refineries

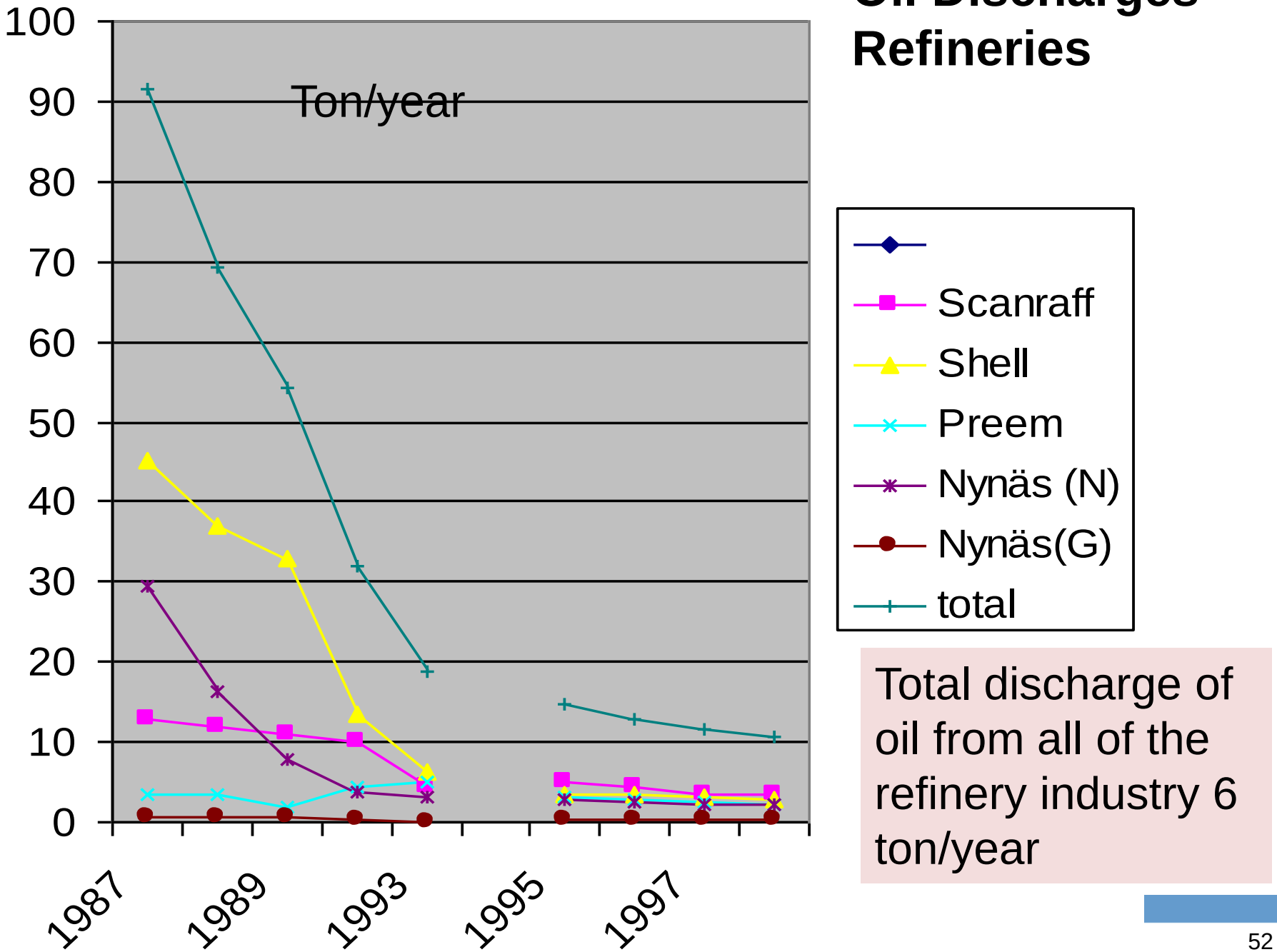

Total discharge of oil from all of the refinery industry 6 ton/year

Waste water treatment plant- PREEM (L)